Développer l'espace de liberté

Tom 4

Vues éclatées - Pièces détachées

Avenue de Champlevert • ZI du Recou • 69520 GRIGNY France • Tél. 04 72 24 08 99 • Fax 04 72 24 25 36 • cree@cree.fr www.cree.fr

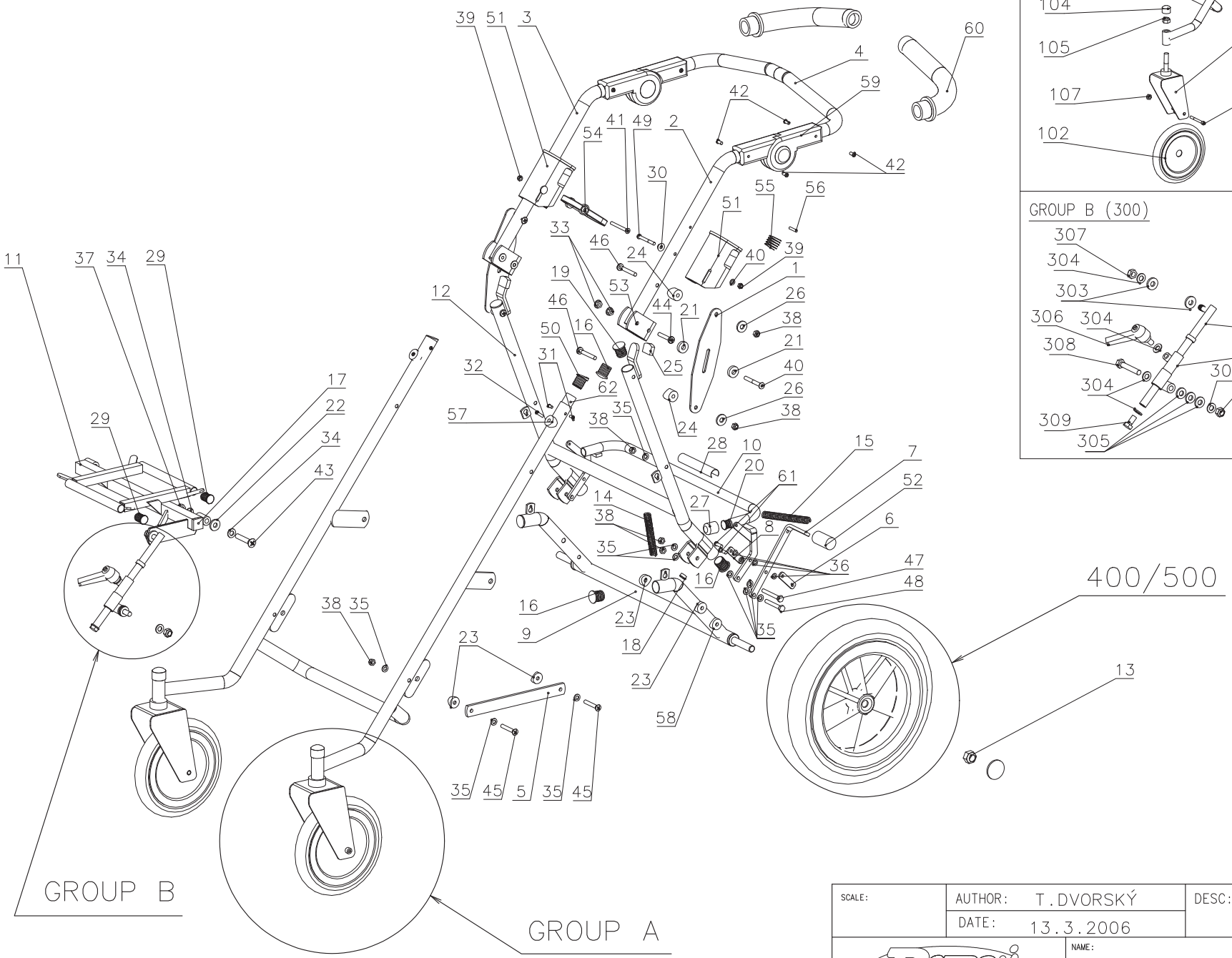

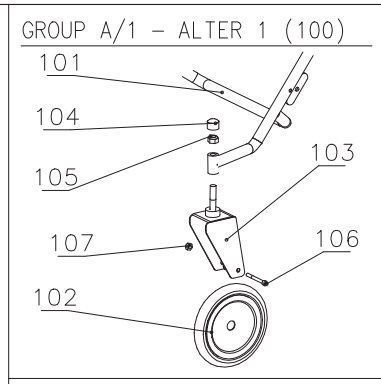

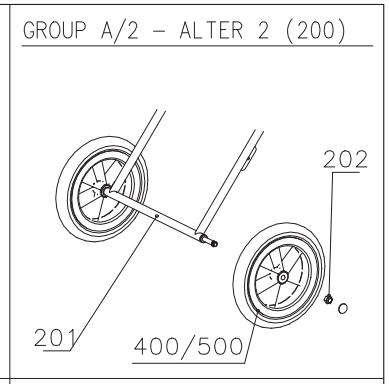

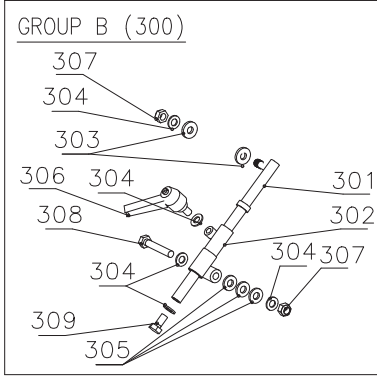

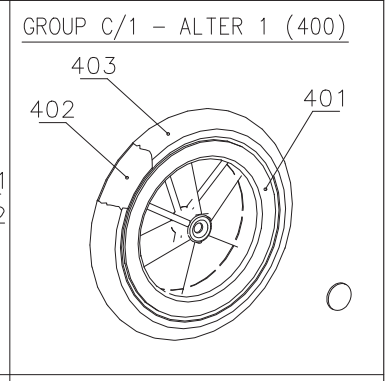

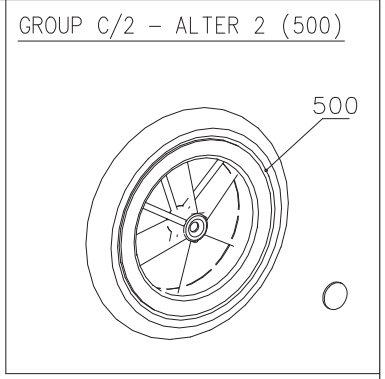

SCALE:	AUTHOR: T.DVORSKÝ DATE: 13.3.2006	DESC: T4X–STD, T4X–MINI
PATRON BOHEMIA	NAME: PODVOZEK/CHASSIS	DRAWING NR.: SVR00005

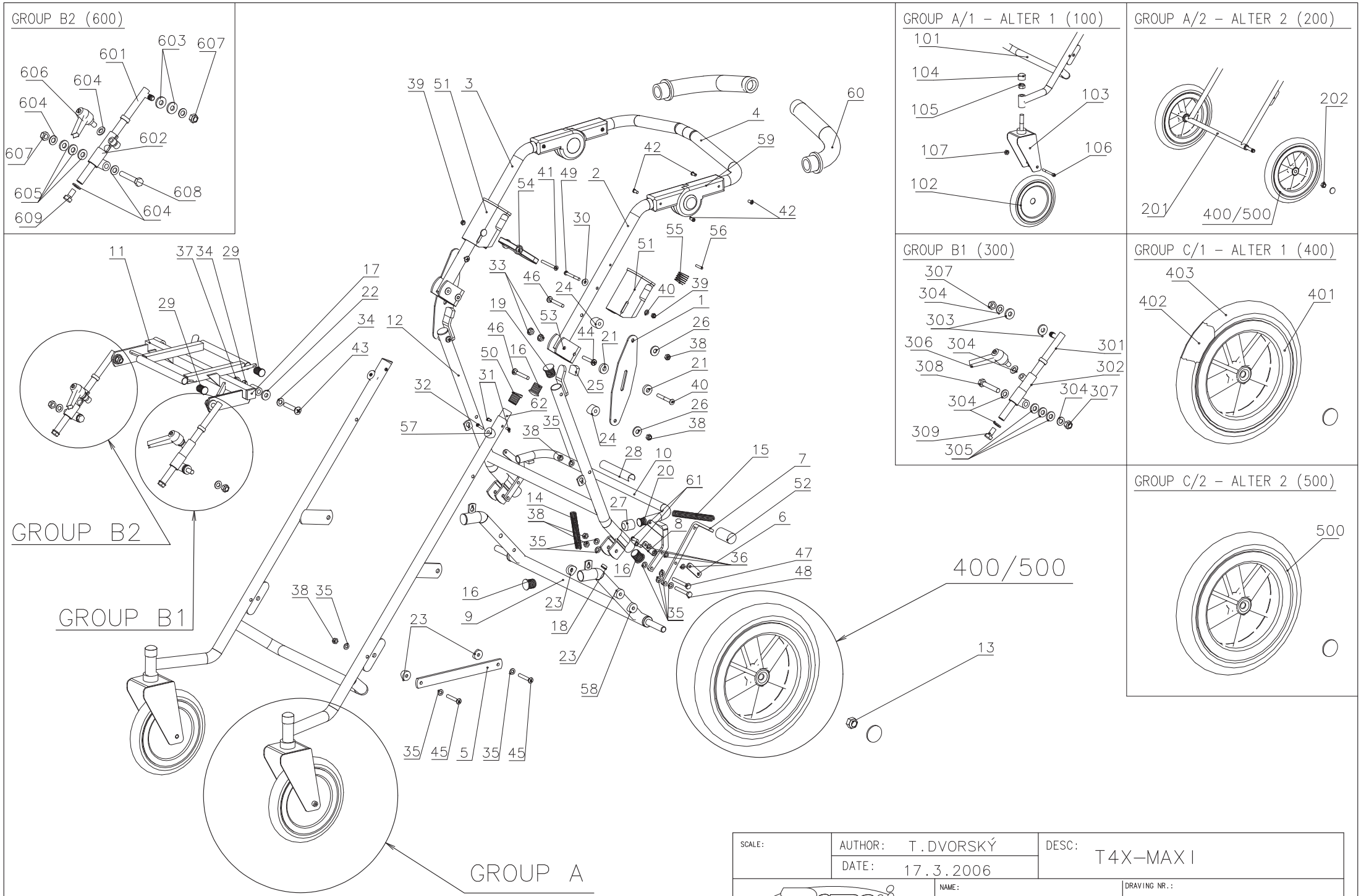

SCALE:	AUTHOR: T.DVORSKÝ	DESC: T4X–MAXI
	DATE: 17.3.2006	
PATRON BOHEMIA	NAME: PODVOZEK/CHASSIS	DRAWING NR.: SVR00009

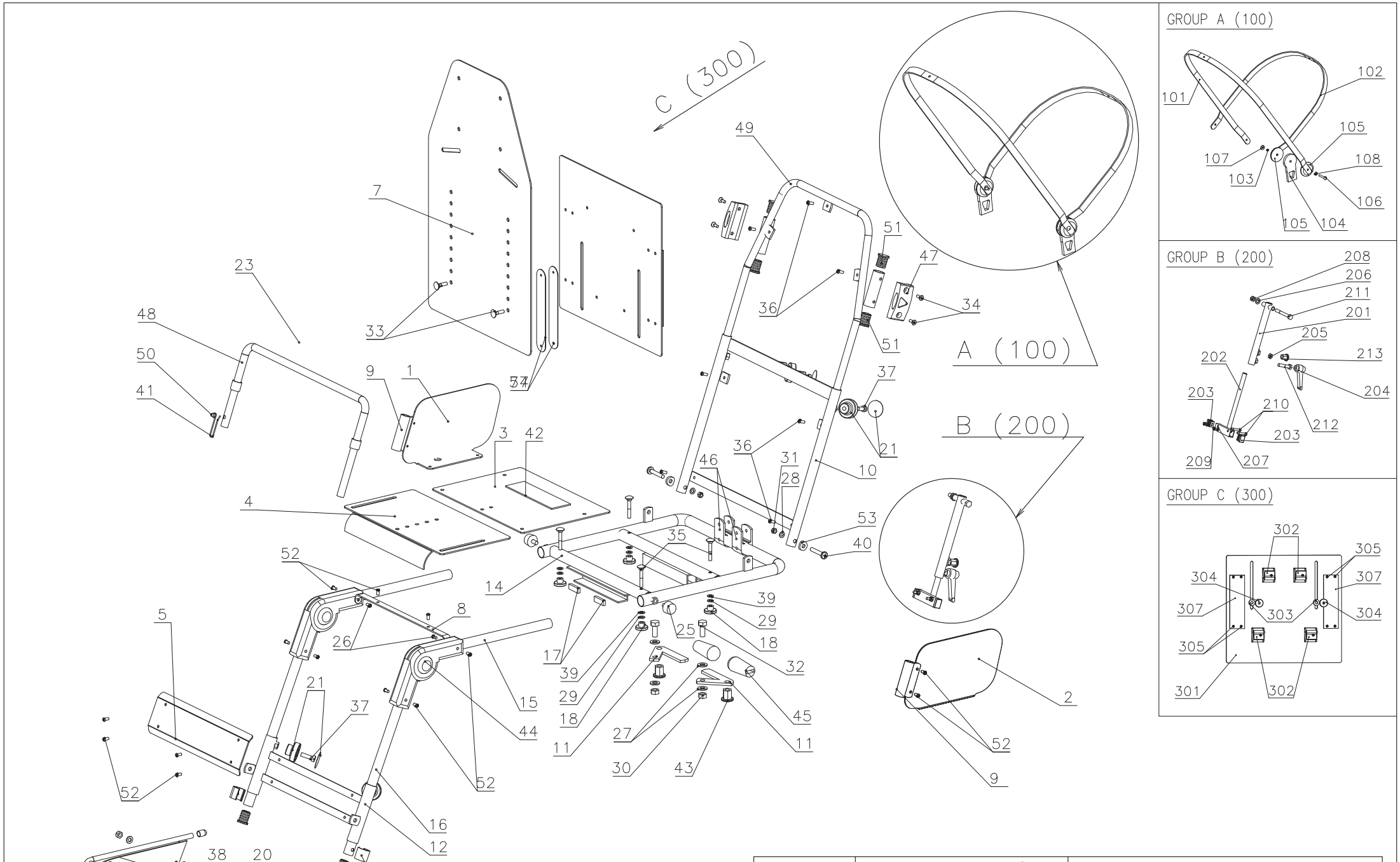

SCALE:	AUTHOR: T.DVORSKÝ	DESC: T4X–MINI, T4C–MINI
	DATE: 17.3.2006	
PATRON BOHEMIA	NAME: SEDAČKA/SEAT	DRAWING NR.: SVR00007

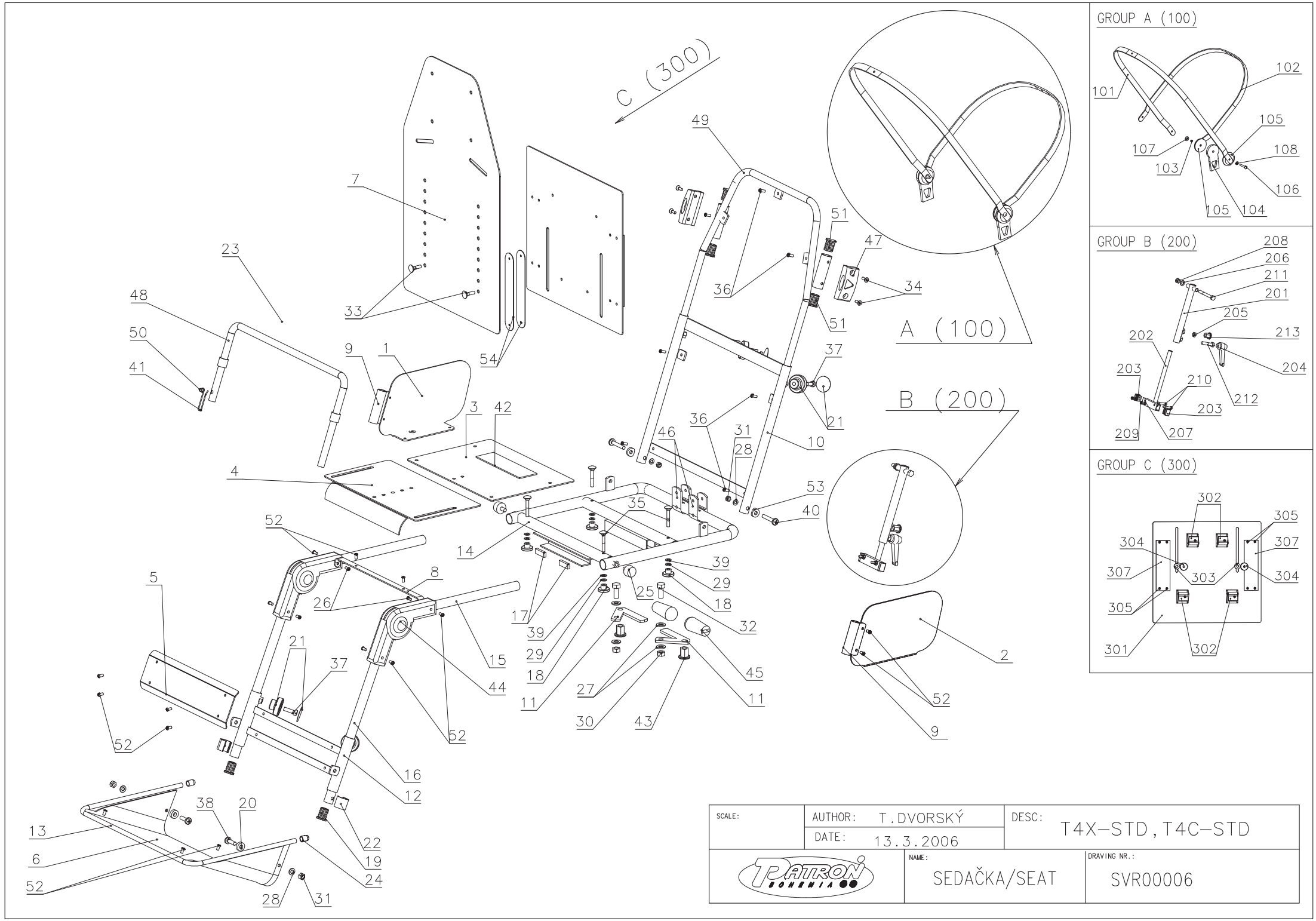
C (300)
A (100)
B (200)
GROUP A (100)
GROUP B (200)
GROUP C (300)
SCALE:
AUTHOR: T.DVORSKÝ
DATE: 13.3.2006
DESC: T4X-STD, T4C-STD
PATRON BOHEMIA
NAME: SEDAČKA/SEAT
DRAWING NR.: SVR00006

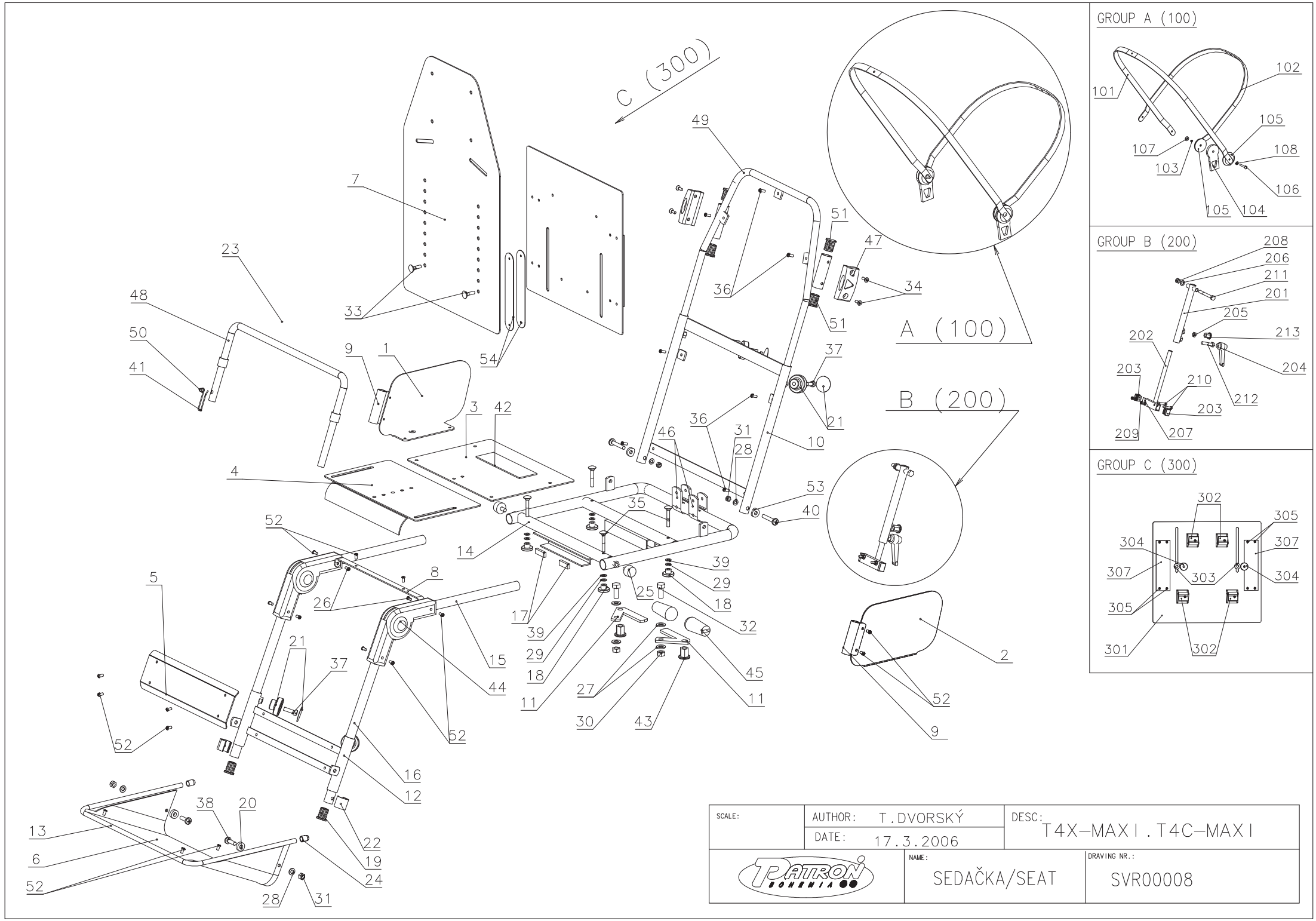

SCALE:	AUTHOR: T.DVORSKÝ	DESC: T4X–MAXI . T4C–MAXI
	DATE: 17.3.2006	
PATRON BOHEMIA	NAME: SEDAČKA/SEAT	DRAWING NR.: SVR00008

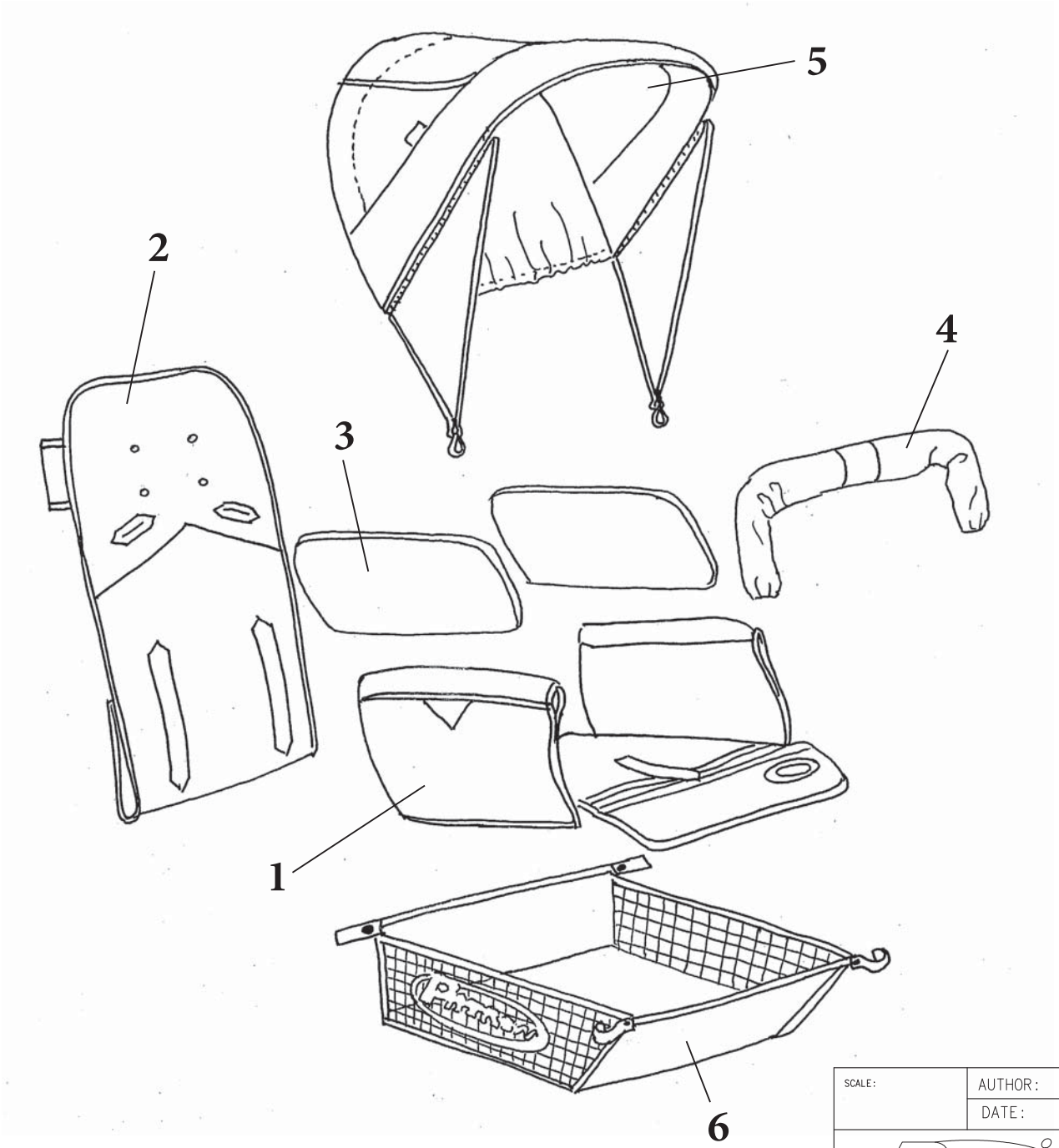

SCALE:	AUTHOR: J.ŠESTÁKOVÁ	DESC: TOM 4 Xcountry MINI	
	DATE: 17.2.2006		
PATRON BOHEMIA	NAME: POTAHY T4X MINI	DRAWING NR.: SVR00001	

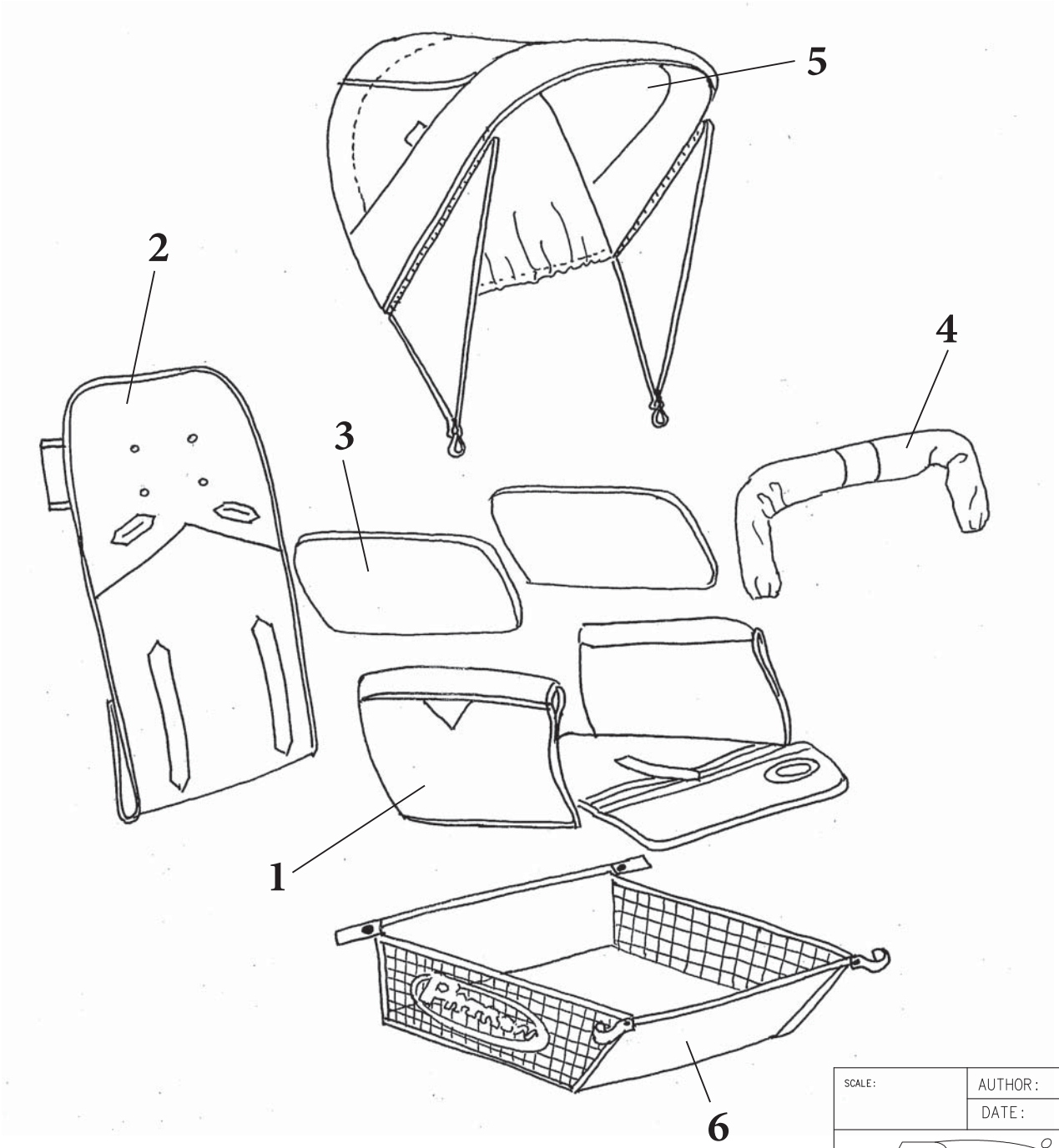

SCALE:	AUTHOR: J.ŠESTÁKOVÁ	DESC: TOM4 Xcountry STD	
	DATE: 17.2.2006		
PATRON BOHEMIA	NAME: POTAHY T4X STD	DRAWING NR.: SVR00002	

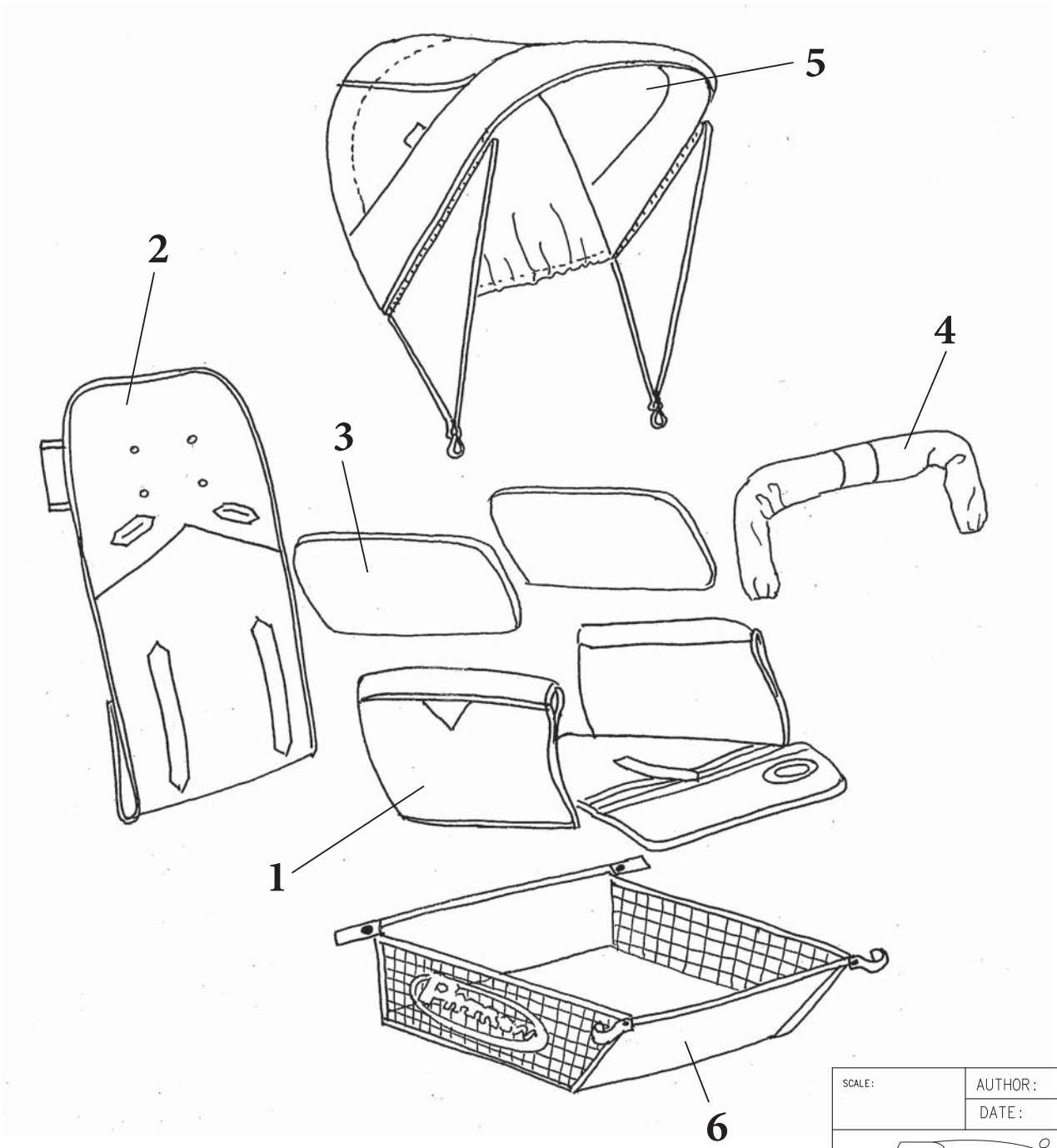

SCALE:	AUTHOR: J.ŠESTÁKOVÁ	DESC: TOM4 Xcountry MAXI	
	DATE: 17.2.2006		
PATRON BOHEMIA	NAME: POTAHY T4X MAXI	DRAWING NR.: SVR00003	